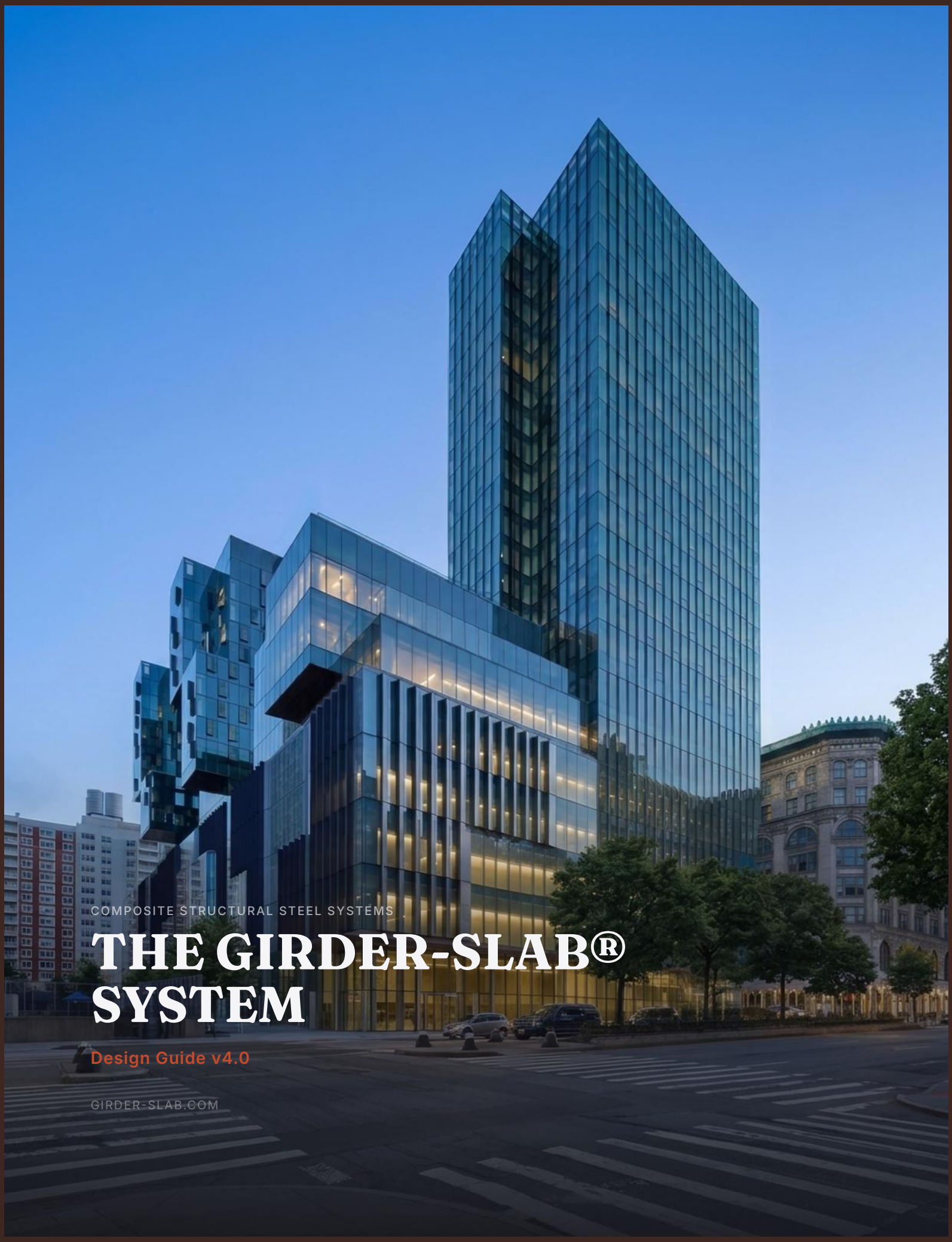

COMPOSITE STRUCTURAL STEEL SYSTEMS

THE GIRDER-SLAB® SYSTEM

Design Guide v4.0

GIRDER-SLAB.COM

Published 2026 / Copyright © 2026 Composite Structural Steel Systems, LLC / All rights reserved.
This design guide or any portion thereof may not be reproduced or used in any manner whatsoever without documented authorization by Composite Structural Steel Systems, LLC.

GIRDER-SLAB® and D-BEAM® are registered trademarks of Girder-Slab Technologies, LLC.

Composite Structural Steel Systems (CS3) is the exclusive marketing, engineering consultation, and distribution partner for the GIRDER-SLAB® system in North America. CS3 assists owners, developers, architects, and engineers of record in evaluating project fit, providing design tools and details, and supporting the engineer of record through design and construction at no cost to the project.

Composite Structural Steel Systems (CS3)
69 Santa Felicia Drive #108, Goleta, CA 93117
www.girder-slab.com

CONTENTS

Design Guide v4.0

Girder-Slab® · Composite Structural Steel Systems

THE SYSTEM

- The Problem 04
- The System 05
- What You're Buying 06
- How It Goes Together 07

THE CASE

- The Numbers 08
- The Track Record 09
- Sustainability 10
- Acoustic Performance 11
- Fire Resistance 14

THE PROOF

- Case Studies 13
- Featured Projects 18
- Is It Right for Your Project? 17

TECHNICAL REFERENCE — FOR DESIGN PROFESSIONALS

- D-Beam® Girder Dimensions 21
- D-Beam® Girder Properties 20
- D-Beam® Girder Cutting Patterns 22
- Design Approach & Calculator Reference 25
- Typical System Details 26
- Fire Assembly Details 28
- Specification Guide 29

THE INDUSTRY PROBLEM

Construction is broken.
Your project pays the price.

The construction industry has declined by nearly every objective measure since 1970. Labor productivity is down 30%. Material costs are volatile. Skilled trade availability is structurally constrained, not cyclically. And the risk profile for any new project is asymmetric in the worst possible direction: a project that goes extremely well might come in 10% under budget. A project that goes badly can run 100% over — or more.

This isn't pessimism. It's the documented baseline your project is competing against before the first shovel breaks ground.

69%
of projects finish more than 10% over budget — with tail risk that can exceed 100% overrun
— KPMG Global Construction Survey

−30%
decline in U.S. construction productivity since 1970
— Goldman Sachs Research, 2025

78%
of construction firms report at least one significantly delayed project in the past year
— AGC/NCCER Workforce Survey, 2025

Girder-Slab® doesn't solve the industry's problems. But it does eliminate several of the specific failure modes that make mid-rise residential projects most vulnerable: above-grade concrete pours, multi-trade sequencing dependencies, weather exposure on the critical path, and the 28-day cure cycles that gate every subsequent floor.

The result is a project that can be built with certainty, precision, and speed. Not hope.

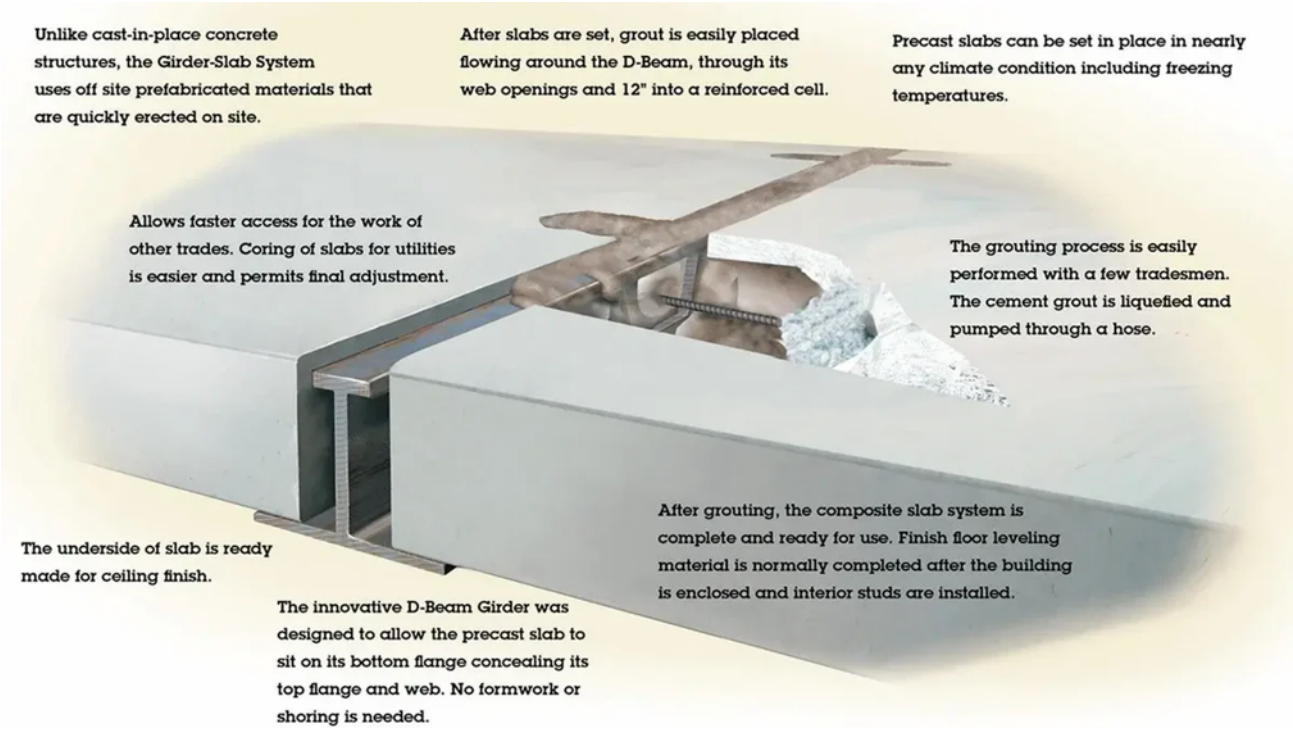

THE GIRDER-SLAB® SYSTEM

Steel & Precast. *Reimagined.*

The Girder-Slab® system is a structural steel and precast concrete hybrid designed specifically for multi-story residential construction. It combines a proprietary open-web steel girder — the D-Beam® — with precast, prestressed hollow core slabs and cementitious grout to form a monolithic composite assembly.

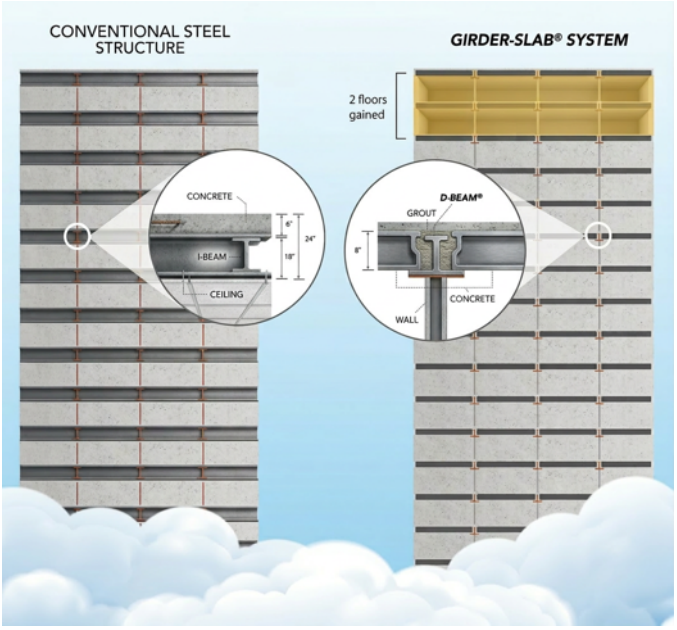

The defining characteristic of the system is where the beam sits: **within the plane of the floor, not below it.** A conventional wide-flange beam hangs below the slab, consuming 18 to 24 inches of floor-to-floor height. The D-Beam® sits inside the slab depth — flush with its top surface, contained within its profile. That recovered depth is real design real estate. More ceiling height at the same envelope. More floors at the same permitted height. Or both.

After the hollow core slabs are set on the D-Beam® bottom flange, structural grout is placed monolithically — flowing around the beam, through its web openings, and 12 inches into the reinforced slab cores. The composite action enables the system to carry significant gravity loads with a lightweight, low-profile section. Components are supplied by the project's own customary subcontractors through standard competitive bidding.

- 18–24" of floor-to-floor height recovered per level
- Single trade erection — ironworkers only
- No formwork, no shoring, no above-grade concrete pours
- No proprietary vendors — standard competitive procurement
- 73% repeat use rate among architects and structural engineers

THE VALUE PROPOSITION

You're not buying a structural system. *You're buying predictability.*

Every decision in a mid-rise residential project compounds. Schedule delays don't just cost time — they cost carry, they push revenue, and they create labor exposure in a market where costs move fast. Cost overruns don't just cut margin — they can breach covenants and threaten the project entirely. The conventional structural systems your team has always used were designed to solve structural problems. Girder-Slab® was designed to solve project problems.

01 — COST CERTAINTY

Conventional construction carries compounding tail risk — multi-trade sequencing, weather exposure, extended concrete cure cycles. Girder-Slab® eliminates those failure modes by design. The result: 17–18% verified all-in savings across completed buildings, not projections.

02 — SCHEDULE CONTROL

A 4-month schedule reduction advances revenue, cuts carrying costs, and compresses labor market exposure simultaneously. No 28-day cure cycles gating upper floors. No shoring stack blocking trades below. Steel erection proceeds above planked floors — breaking the sequential dependency that defines conventional pours.

03 — FLOOR OPTIMIZATION

18–24" of depth saved per level is permanent, recurring revenue. At permitted height, additional floors are possible that would be physically impossible with conventional steel. Troy Boston gained two floors — 378 units, $185M campus — that couldn't have been built any other way.

There are real tradeoffs. The D-Beam® bottom flange requires fire protection — either spray-applied fireproofing or a gypsum soffit enclosure. Plumbing chases require coordination around beam and grout zones. Column-framed layouts are less flexible than flat-plate systems for future modifications. These are honest tradeoffs, not dealbreakers. For the projects where the economics matter most, they are decisively outweighed.

ASSEMBLY SEQUENCE

One trade. Six steps. *No concrete.*

The complete structural assembly is performed by a single crew of ironworkers — the same trade erecting the rest of the steel package. No specialty trade mobilization. No concrete crew above grade. No weather-dependent waiting. Construction becomes assembly.

01	**D-BEAM® ERECTION**	Erected as part of the standard structural steel package — same crew, same schedule, no separate mobilization.
02	**HOLLOW CORE SLAB SETTING**	Precast slabs set directly on the D-Beam® bottom flange. No formwork. No shoring. No concrete crew required.
03	**UPPER-FLOOR STEEL PROCEEDS**	Upper-floor plank can be set before lower-floor grouting completes — sequential dependency eliminated.
04	**MONOLITHIC GROUTING**	Grout placed in a single operation through D-Beam® web openings and into slab cores. No above-grade concrete pour.
05	**COMPOSITE SLAB COMPLETE**	Structurally complete after grouting. No extended curing wait before upper-floor steel erection continues.
06	**MEP TRADES FOLLOW FLOOR-BY-FLOOR**	Mechanical, electrical, and plumbing trades follow immediately — floor by floor, no waiting on a complete pour.

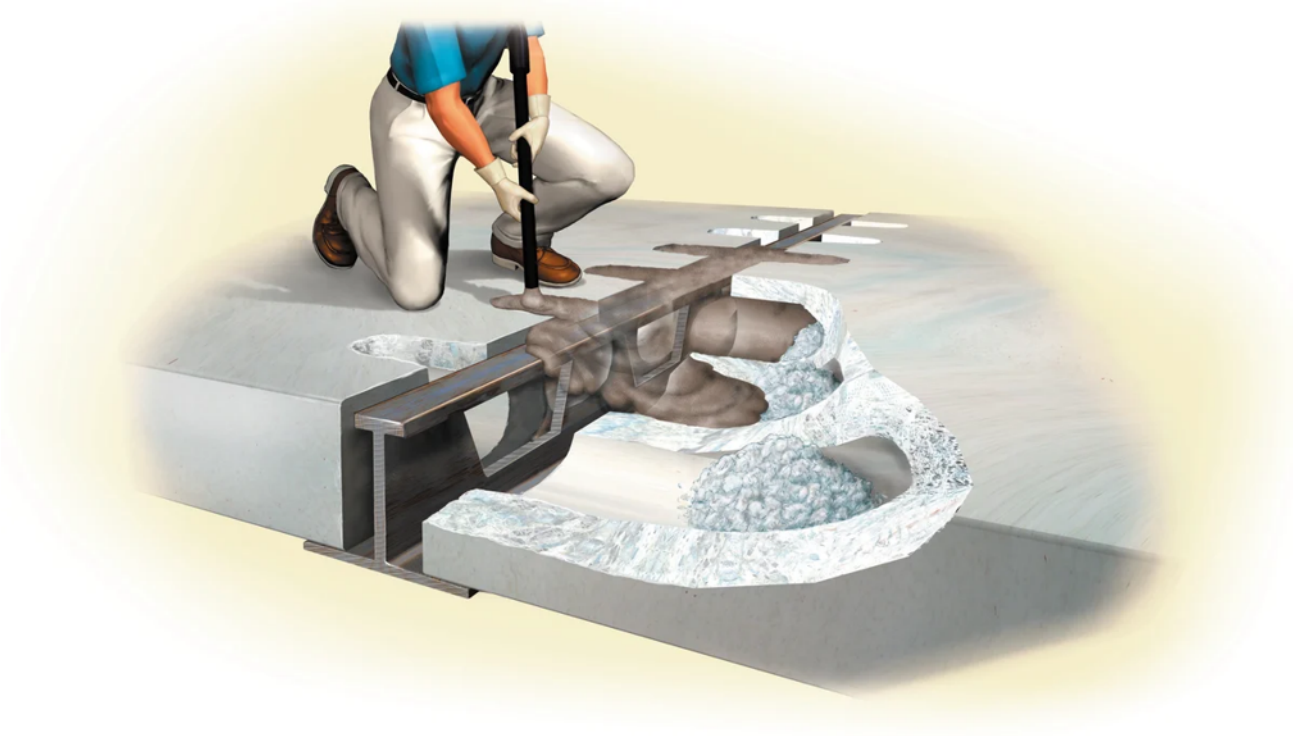

FINANCIAL IMPACT

Every variable compounds. *So does the advantage.*

The performance record for Girder-Slab® spans more than 400 completed buildings. The numbers below are verified outcomes from documented projects — not projections, not estimates, not best-case scenarios.

18%

All-in verified savings on structural cost

330 Cooper St., Rutgers University — 12 stories, 161,653 SF

4 mo.

Average schedule reduction

Documented across completed projects — 1 month in design, 3 months in construction

+2

Additional leasable floors at permitted height

Troy Boston — physically impossible with conventional steel

The reason these numbers matter more than they appear on paper is how they interact. A 4-month schedule reduction doesn't produce one benefit — it produces a cascade. Lower construction financing costs. Earlier revenue generation. Reduced labor market exposure during a period of volatile trade pricing. Improved IRR for project stakeholders — not marginal improvement, but the kind that determines whether a project gets financed in the first place.

Add floor-count optimization at permitted height — permanent, recurring revenue that no operating efficiency can replicate — and the structural system selection becomes one of the most consequential early decisions in any eligible project.

> *"Sometimes things are faster but they cost more, sometimes they cost less but take more time. In this particular case we were able to get a win-win."*
>
> — Kelly Saito, President, Gerding Edlen / Troy Boston Developer

The breakdown of the 18% figure: approximately 15% comes from direct savings on materials, labor, and sequencing efficiency. The remaining 3% reflects reduced construction financing interest — the compounding benefit of a shorter construction period. On a $185M project, 3% is not a rounding error.

These outcomes are not exceptional. They are what the system produces by design on every eligible project. The physics do not change from project to project. What changes is whether the project team has the right information early enough to capture them.

PROVEN PERFORMANCE

Numbers from completed buildings, *not projections.*

400+
Completed buildings — United States, Canada, India

73%
Repeat use rate among architects and structural engineers who have designed with the system

30+
Years of laboratory testing and field performance data — ASD and LRFD design approaches validated

The 73% repeat use rate is the most honest number in this document. It reflects a straightforward decision: design professionals who have used the system once have chosen to use it again nearly three out of four times. That is not a marketing statistic. It is the revealed preference of the people who know the system best.

BUILT WITH AND SPECIFIED BY

GENERAL CONTRACTORS	ENGINEERS/ARCHITECTS	HOSPITALITY BRANDS	UNIVERSITIES & INSTITUTIONS
Turner Construction	Thornton Tomasetti	Fairmont Hotels & Resorts	MIT
Skanska	WSP	Hard Rock Hotel & Casino	Princeton University
Gilbane	McNamara Salvia	Holiday Inn	Brown University
Suffolk Construction	O'Donnell & Naccarato	Holiday Inn Express	NYU
AECOM Tishman	DeSimone Consulting Engineers	Yotel	University of Michigan
McDonald Building Company	The Harman Group	Aloft Hotels	University of Virginia
TN Ward	Odeh Engineers	MGM Resorts	Simmons University
Benchmark Construction	IMEG	Hotel Carmichael	Colby College
Clemens	Stantec	AC Hotels	Clemson University
Consigli	Cates	Autograph Collection	Temple University
Daniel J. Keating	Davis Brody Bond	Charlestown Hotels	Drexel University
Dimeo	Fitzgerald Associates Architects	Cliff House	Cornell University
IMC	Gensler	Country Inn & Suites	Duke University
LF Driscoll	Goody Clancy	DoubleTree by Hilton	Duquesne University
Rycon Construction	Niles Bolton	Embassy Suites	James Madison University
Toll Brothers	Perkins Eastman	Hilton	Penn State
	SGA	Homewood Suites	Providence College
	Shepley Bulfinch	Hyatt	Purdue University
		Hyatt Centric	Rowan University
		Hyatt Place	Rutgers University
		Marriott	University of Pennsylvania
		Residence Inn	University of Pittsburgh
		The Landing Hotel	URI
		Wyndham	West Chester University

The GIRDER-SLAB® system has been used in mid-rise and high-rise residential, student housing, hospitality, mixed-use, and senior living projects by some of the most recognized developers, construction firms, and institutions in North America and internationally. The structural engineering firms who specify it include several of the largest and most respected in their markets.

SUSTAINABILITY

Structural-level carbon reduction. *Not offsets.*

Every above-grade concrete pour eliminated by the Girder-Slab® system is a direct reduction in process emissions — not a credit, not a certificate, not an offset purchased after the fact. The structural advantage is built in.

Concrete production accounts for approximately 8% of global CO emissions. The built environment as a whole is responsible for 39% of global greenhouse gas emissions, and the structural system accounts for roughly 80% of a building's embodied carbon. This is not an envelope problem. It requires a structural solution.

93%+

Recycled content in structural steel — higher than any concrete system by design

0

Above-grade concrete pours in the structural system — eliminated entirely

41.7%

Reduction in embodied CO documented on the Edmonton International Airport Hotel vs. the original CIP design

Across completed projects, comparative impact analyses of the Girder-Slab® system against cast-in-place (CIP) construction consistently demonstrate a 30–50% reduction in net embodied carbon. The variance reflects project-specific conditions; the direction is consistent. Electric arc furnace (EAF) steel — available from most domestic mills — reduces structural steel process emissions further still.

For projects pursuing LEED v4, BREEAM, or compliance with local whole-building embodied carbon ordinances, the structural steel recycled content and EAF production documentation can be provided by CS3 for direct use in material submissions. As embodied carbon requirements expand across major U.S. metros, structural system selection is increasingly a compliance variable — not just a design preference.

ACOUSTIC PERFORMANCE

Above code on STC.
IIC depends on floor finish — same as every concrete system.

The 8" precast hollow core slab tests at STC 56 bare — without any floor covering — and STC 59 with a 2" structural topping. Both values exceed the IBC 50 minimum for multifamily residential party-wall assemblies. The structural assembly alone delivers compliant airborne sound isolation before a single finish material is installed.

Impact isolation (IIC) is a different story. Bare concrete — regardless of system type — does not meet IIC 50 without floor finish. This is not a Girder-Slab® limitation. It is how impact sound physics work for every concrete floor system. Standard residential floor finishes — carpet with pad, vinyl plank on sound-deadening underlayment — clear the IBC 50 minimum comfortably. The table below shows tested assemblies.

Assembly	STC	IIC	Notes
IBC Minimum — Multifamily Residential (party-wall floor-ceiling assemblies): STC 50 / IIC 50			
8" hollow core plank — bare structural base, no finish	56	28	Structural assembly alone. STC exceeds code; IIC requires floor finish.
8" hollow core + 2" normal-weight structural topping	59	31	Common in hospitality and high-end multifamily. STC well above code.
8" plank + vinyl tile on 1/8" foam underlayment	50	58	Standard multifamily rental spec. Both STC and IIC meet code.
8" plank + vinyl tile on sound-deadening board underlayment	54	51	Upgrade spec for condominium and hotel. Both above code.
8" plank + 1½" topping + carpet & pad	57	76	Premium residential / hospitality spec. IIC substantially above code.
8" plank + wood flooring on sound-deadening underlayment + suspended acoustical ceiling	59	61	High-end hotel / senior living spec. Both well above code.

Values from tested assemblies on Girder-Slab® precast hollow core plank. A complete data set including 6" and 10" plank, gypsum concrete toppings, wool carpet, and assemblies with suspended ceilings is available in the Acoustic Performance Data Sheet at girder-slab.com/for-engineers.

STC measures airborne sound isolation — voices, television, music. An STC 56 assembly means conversation in the unit above is not intelligible. IIC measures impact sound — footsteps, dropped objects. Standard residential finishes clear IBC 50 comfortably; carpet with pad reaches IIC 73+ on these assemblies. The system supports any conventional ceiling finish approach: painted slab, drywall soffit, drop ceiling, or suspended acoustical tile.

ACOUSTIC PERFORMANCE

Floor Leveling & Finish Options

Leveling fill choice affects dead load, acoustic performance, and project economics. All residential assemblies still require appropriate finish floor materials to meet IIC 50.

Option	Dead Load	Impact Isolation	Typical Application
Gypcrete (3/4"–7/8")	~9 psf	Low	Standard rental multifamily and hotel; IIC met by resilient finish floor (LVP, carpet).
Sound mat + gypcrete	~10 psf	High	Condominium, senior living, premium hotel; hard-surface floors (tile, hardwood) meet IIC 50+ without carpet.
2" structural topping	~25 psf	Medium	Hospitality and mixed-use requiring a monolithic concrete feel; added weight erodes roughly half the foundation cost advantage.
Spot-level only	Minimal	—	Non-residential levels — parking, retail, mechanical — where IIC compliance is not required.

FIRE RESISTANCE

UL K912.
2-hour and 3-hour rated. Certified for Canada.

The GIRDER-SLAB® system is fire-rated for use in residential buildings when constructed in accordance with Underwriters Laboratories, Inc. Floor-Ceiling Assembly Design No. K912. The assembly carries restrained ratings of 2 hours and 3 hours, and an unrestrained rating of 2 hours. It is certified under both ANSI/UL 263 (United States) and CAN/ULC-S101 (Canada).

The hollow core slab and structural grout provide the primary fire resistance. The D-Beam® bottom flange requires protection and can be addressed by one of two standard approaches:

OPTION A — SPRAY-APPLIED FIREPROOFING (SFRM)

Applied to the bottom flange and flange tips in a single coat. Minimum 3/8" untamped thickness for standard assemblies; 1/2" for alternate approved products. Approved products include Isolatek International (Type D-C/F, HP, I, or II) and GCP Applied Technologies (MK6/HY series). Most cost-effective in open ceiling applications.

OPTION B — GYPSUM BOARD SOFFIT ENCLOSURE

25 MSG galvanized runner channel fastened to the beam, with 1/2" or 5/8" gypsum board screwed at 16" OC. Provides a finished ceiling surface that conceals the D-Beam® bottom flange entirely. Preferred where a finished ceiling appearance is required at the structural soffit level without a separate ceiling system below.

The full UL K912 assembly listing — including all approved products, thicknesses, and tolerances — is available in the Technical Reference section of this guide and at girder-slab.com/for-engineers. Both options are standard applications for the ironworker and drywall trades already on site; no specialty fireproofing contractor mobilization is required beyond what any steel project would include.

CASE STUDIES

Verified outcomes.
Real projects. Documented results.

The Hamilton — Phase II

Philadelphia, PA 16 Stories 228,000 SF Mixed Use

Developer: Radnor Property Group Architect: MY Architecture Engineer: Harman Group Builder: McDonald Building Company

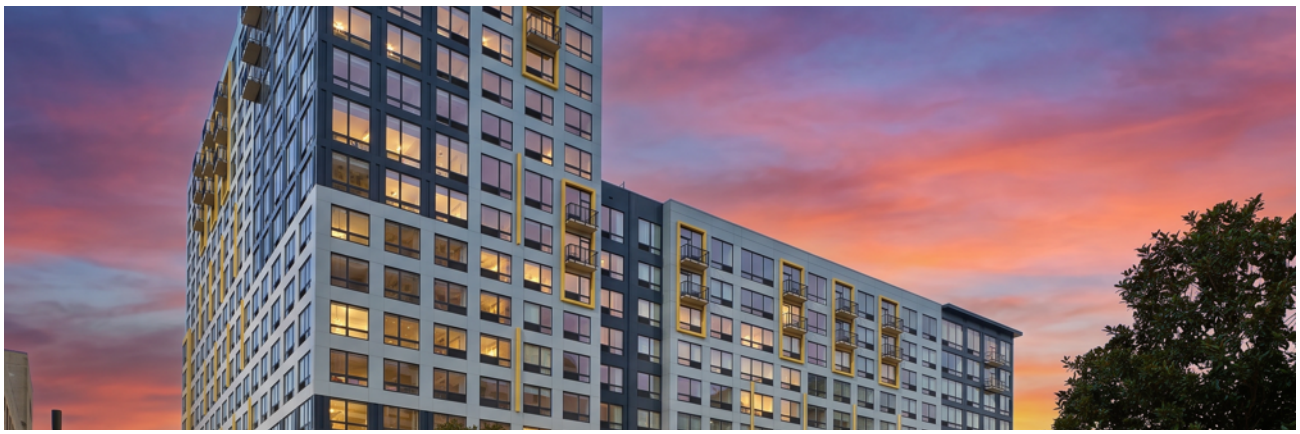

The Hamilton tells its story in a single comparison. Phase I of the project was built using a conventional structural steel system. It took 30 months to complete. Phase II — same developer, same site, same building type — used the Girder-Slab® system and was fully completed in 15 months. During a global pandemic.

The 4.5-day floor-to-floor cycle achieved by the McDonald Building Company crew was not a product of favorable conditions. It was a product of single-trade erection, no shoring, no above-grade pours, and a structural assembly sequence that eliminated the dependencies that make conventional construction inherently sequential and weather-sensitive.

> *"...a concise 15 weeks from setting the first steel column to setting the last beam today. That translates to a 4.5-day floor-to-floor cycle. Extremely efficient considering this was done in the middle of a pandemic."*
>
> — McDonald Building Company

15 mo.
Phase II construction duration — Girder-Slab®

30 mo.
Phase I construction duration — conventional steel

4.5 days
Floor-to-floor cycle — achieved during active pandemic conditions

The Hamilton is the most direct controlled comparison in the Girder-Slab® project record — same client, same building program, consecutive phases, different structural systems. The result was not close.

CASE STUDIES

Troy Boston

Boston, MA 378 Units $185M Campus Multifamily Residential

Developer: Gerding Edlen Builder: Suffolk Construction



Troy Boston started as a building of one height and finished as a building of another. Two floors were constructed that could not have been built using a conventional structural steel system at the permitted building height. They exist because the Girder-Slab® system recovered 18–24 inches of floor-to-floor depth per level — depth that, accumulated across the full building height, created room for two additional floors within the same permitted envelope.

This is not a design optimization. It is a physical consequence of where the structural beam sits. A conventional wide-flange beam below the slab consumes that depth. The D-Beam® within the slab does not. On a $185M, 378-unit residential campus, two additional floors of leasable area is permanent, recurring revenue that no operational efficiency achieves after the fact.

> *"Sometimes things are faster but they cost more, sometimes they cost less but take more time. In this particular case we were able to get a win-win."*
>
> — Kelly Saito, President, Gerding Edlen

+2
Additional floors constructed — impossible with conventional steel at permitted height

378
Units — $185M campus

4 mo.
Trimmed from construction schedule

The schedule savings on Troy Boston — four months trimmed from a conventional construction timeline — produced the compounding effect described elsewhere in this guide: lower financing cost, earlier revenue, and improved IRR. But the floor-count result is the number that doesn't appear in any other category. It is the permanent structural advantage, locked in at permitted height, that benefits the ownership of that building for its entire useful life.

THE RECORD

Not outliers.
The same physics apply to every eligible project.

> *Hamilton and Troy Boston are documented, named, verifiable — but the same physics apply to every eligible Girder-Slab® project. 400+ completed buildings. 73% repeat use among the design teams who know the system best. The record is consistent because the system is consistent.*

400+
Completed buildings across the U.S., Canada, and internationally

73%
Repeat use rate — the design teams who know the system best keep choosing it

18%
Verified all-in savings — 330 Cooper St., Rutgers University, 161,653 SF

The same structural physics that gave Hamilton its 15-month construction cycle, Troy Boston its two additional floors, and 330 Cooper its 18% verified savings apply identically to every eligible project in every market. These results are not circumstantial. They are what the system produces by design.

SELECTED PROJECTS

Beautiful buildings. *Irresistible economics.*



The Alcott
Philadelphia, PA — Multifamily

One Simmons Living & Learning Center
Boston, MA — Student Housing · 1,100 beds · $311M · LEED Certified

Paulson Center at NYU
New York, NY — Student Housing / Academic

Graduate Junction at MIT
Cambridge, MA — Student Housing

Fairmont Mumbai
Mumbai, India — Hospitality

Hyatt Centric
Philadelphia, PA — Hospitality

Hard Rock Hotel & Casino Bristol
Bristol, VA — Hospitality · 303 keys · 141,896 SF

Prospect Union Square
Somerville, MA — Multifamily

Edmonton International Airport Hotel
Edmonton, AB, Canada — Hospitality · 8 stories · 8-month schedule reduction · ~15% capital savings · slim profile enabled 8th floor · upgraded Marriott Courtyard Renaissance · 41.7% embodied CO reduction

330 Cooper Street — Rutgers University
Camden, NJ — Student Housing · 12 stories · 161,653 SF · 18% documented savings

Aqua on the Ocean
Long Beach, NY — Residential

A full project gallery is available at girder-slab.com/projects.

PROJECT FIT

The system performs best when *the economics matter most.*

Girder-Slab® is not the right system for every project. It is decisively the right system for certain ones. These are the four conditions under which its advantages are most material:

01

MID- TO HIGH-RISE HEIGHT

Typically 5–30+ stories. Floor-count economics become significant — each floor saved in depth or added at permitted height compounds in value over the building's useful life. The structural depth advantage is fixed per floor; the more floors, the greater the accumulated benefit.

02

HIGH-LABOR-COST MARKETS

Urban environments where labor is expensive, scarce, and unreliable. The value of single-trade erection scales directly with how difficult the labor market is. Eliminating multi-trade sequencing in a constrained labor environment is not a convenience — it is a risk-management strategy.

03

RESIDENTIAL OR HOSPITALITY

Apartments, condominiums, hotels, student housing, senior living. Repetitive floor plates where the rhythm of installation delivers maximum schedule compression. Acoustic performance is a standard requirement; the system exceeds IBC minimums on STC with standard finishes meeting IIC.

04

SCHEDULE-CONSTRAINED PROJECTS

Hard delivery dates — fall semester move-in, hotel grand opening, construction financing covenants. Schedule predictability is the primary value, not just speed. No above-grade pours. No weather holds. No 28-day cures. The schedule is the schedule.

The best way to determine fit is a project evaluation with CS3. CS3 provides free engineering consultation to developers, architects, structural engineers, and construction teams — from initial feasibility through design completion, at no cost to the project.

START A PROJECT

Run the numbers on your project.

CS3 works directly with developers, structural engineers, architects, and construction teams to evaluate project fit — at no cost to the project. Free engineering consultation from initial feasibility through design completion.

Request a Free Project Evaluation — girder-slab.com/evaluate

Engineering Resources (Calculator, CAD Details, Spec Guide, Acoustic Data Sheet) — girder-slab.com/for-engineers

girder-slab.com

1-888-478-1100

GIRDER-SLAB® DESIGN GUIDE V4.0

Technical Reference

For Design Professionals — Structural Engineers and Architects of Record

Application and use of this information requires design by a registered professional structural engineer. The GIRDER-SLAB® system and the D-BEAM® girder are available from CS3-authorized steel fabricators only. Full CAD details, specification language, the D-Beam® Girder Calculator, and the Acoustic Performance Data Sheet are available at girder-slab.com/for-engineers.

TECHNICAL REFERENCE

D-Beam® Girder Dimensions

All dimensions in inches unless otherwise noted. Fabricated from ASTM A992/A572 Grade 50 structural steel wide-flange sections with flat bar top flange. Meets AISC standards except depth tolerance ±1/8". Two D-Beam® girders fabricated from one parent beam without waste.

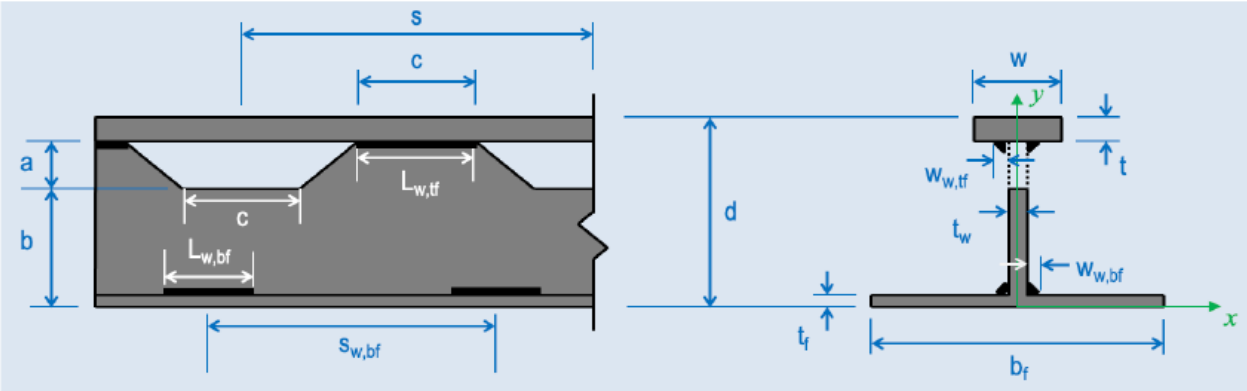

Designation	Wt (lb/ft)	Area (in²)	Depth d	Parent Beam	t_w	t_f	b_f	a	b	w	t
8" D-Beam® Girder Sections											
DB 8 × 37	36.7	10.8	8	W12×53	3/8	9/16	10	2	5	3	1
DB 8 × 39	39.2	11.5	8	W12×58	3/8	5/8	10	1¾	5¼	3	1
DB 8 × 42	41.8	12.3	8	W12×53	3/8	9/16	10	1½	5½	3	1½
DB 8 × 44 [a]	44.3	13.0	8	W12×58	3/8	5/8	10	¾	5¾	3	1½
DB 8 × 57	56.5	16.6	8	W12×79	1/2	3/4	12	1	5	5	1
DB 8 × 61	60.8	17.9	8	W12×79	1/2	3/4	12	1	5	5	1¼
9" D-Beam® Girder Sections											
DB 9 × 41	40.7	12.0	9	W14×61	3/8	5/8	10	3	5¼	3	1
DB 9 × 44 [b]	44.2	13.0	9¾	W14×68	7/16	3/4	10	3½	5¼	3	1
DB 9 × 46	45.8	13.5	9	W14×61	3/8	5/8	10	2	5¾	3	1½
DB 9 × 47 [c]	47.2	13.9	9 13⁄16	W14×74	7/16	13/16	10	3½	5 5⁄16	3	1
DB 9 × 49	49.3	14.5	9¾	W14×68	7/16	3/4	10	2½	5¾	3	1½
DB 9 × 52	52.3	15.4	9 13⁄16	W14×74	7/16	13/16	10	2½	5 13⁄16	3	1½
DB 9 × 55	54.7	16.1	9	W16×89	1/2	7/8	10	15/16	7 15/16	3	1
DB 9 × 57	56.5	16.6	9¾	W12×79	1/2	3/4	12	5	3	5	1
DB 9 × 61	61.4	18.0	9	W14×82	1/2	7/8	10	1	6 7/16	3	2
DB 9 × 65	65.0	19.1	9¾	W12×79	1/2	3/4	12	4	4	5	1½
DB 9 × 78	77.5	22.8	9	W14×109	1/2	7/8	14	15/16	6 11/16	3	2¼
DB 9 × 80	80.1	23.6	9¾	W14×99	1/2	3/4	14	13/16	6 11/16	4	2¼

Weight includes web. Area is average. Depth tolerance ±1/8". Verify current parent beam availability with local fabricator. [a] Formerly designated DB 8×45. [b] Formerly designated DB 9×45. [c] Formerly designated DB 9×48.

TECHNICAL REFERENCE

D-Beam® Girder Properties

F_y = 50 ksi. Properties are for the D-Beam® steel section only (non-composite). Composite section properties for each assembly (S1, S2, S3) are available in the D-Beam® Girder Calculator at girder-slab.com/for-engineers.

Designation	I_x (in)	NA_{bot} (in)	S_{bot} (in^3)	S_{top} (in^3)	$Q_{top\ bar}$ (in^3)	PNA_{bot} (in)	Z (in^3)	Allowable / Design Moment (kip-ft)		
								ASD 9th Ed. M_{allow}	ASD 14th Ed. M_n $_b$	LRFD 14th Ed. $_bM_n$
8" D-Beam® Girder Sections										
DB 8 × 37	105	2.79	37.7	20.2	14.1	0.51	26.1	50.4	65.0	97.7
DB 8 × 39	108	2.69	40.3	20.4	14.4	0.55	26.5	51.0	66.2	99.5
DB 8 × 42	126	3.32	38.0	27.0	17.7	1.53	35.9	67.6	89.6	134.6
DB 8 × 44 [a]	131	3.21	40.8	27.4	18.2	0.85	36.7	68.5	91.5	137.5
DB 8 × 57	169	2.93	57.7	33.3	22.9	0.68	42.4	83.2	105.9	159.2
DB 8 × 61	188	3.22	58.2	39.2	26.0	0.73	50.8	98.1	126.6	190.3
9" D-Beam® Girder Sections										
DB 9 × 41	161	3.13	51.4	24.8	18.0	0.55	31.4	62.0	78.4	117.8
DB 9 × 44 [b]	173	2.92	59.1	25.3	19.0	0.62	32.6	63.3	81.3	122.2
DB 9 × 46	198	3.79	52.2	33.9	22.9	0.85	44.0	84.8	109.7	164.9
DB 9 × 47 [c]	179	2.83	63.1	25.6	19.5	0.65	33.0	63.9	82.4	123.8
DB 9 × 49	215	3.55	60.6	34.7	24.5	0.71	45.4	86.8	113.2	170.2
DB 9 × 52	224	3.44	65.0	35.2	25.3	0.74	45.9	87.9	114.5	172.0
DB 9 × 55	205	3.06	66.8	30.1	18.9	0.76	42.4	75.3	106.0	159.0
DB 9 × 57	258	3.40	76.0	40.7	29.3	0.64	47.8	101.7	119.3	179.4
DB 9 × 61	262	3.85	68.1	43.5	30.1	1.05	59.7	108.8	149.3	223.9
DB 9 × 65	314	4.10	76.6	55.7	36.7	0.84	68.1	139.2	170.0	255.5
DB 9 × 78	316	3.39	93.0	48.8	36.1	0.77	67.3	122.0	168.3	252.4
DB 9 × 80	355	3.99	88.8	61.5	41.8	1.28	83.5	153.8	208.8	313.1

Non-composite steel section properties only. Use the D-Beam® Girder Calculator for composite assembly design. ASD 9th Edition $M_{allow} = F_bS$; ASD 14th Edition M_n/Ω_b and LRFD 14th Edition φ_bM_n per AISC 360. F_y = 50 ksi. [a] Formerly designated DB 8×45. [b] Formerly designated DB 9×45. [c] Formerly designated DB 9×48.

TECHNICAL REFERENCE

8" D-Beam® Girder Cutting Patterns

The D-Beam® girder is fabricated from a standard wide-flange section cut uniquely through the web, producing two identical tee sections. A flat bar is then welded to the top of the remaining web to form the narrow top flange. Two D-Beam® girders are produced from one parent beam without waste. Cutting patterns are provided for reference — actual fabrication drawings are prepared by the CS3-authorized steel fabricator.

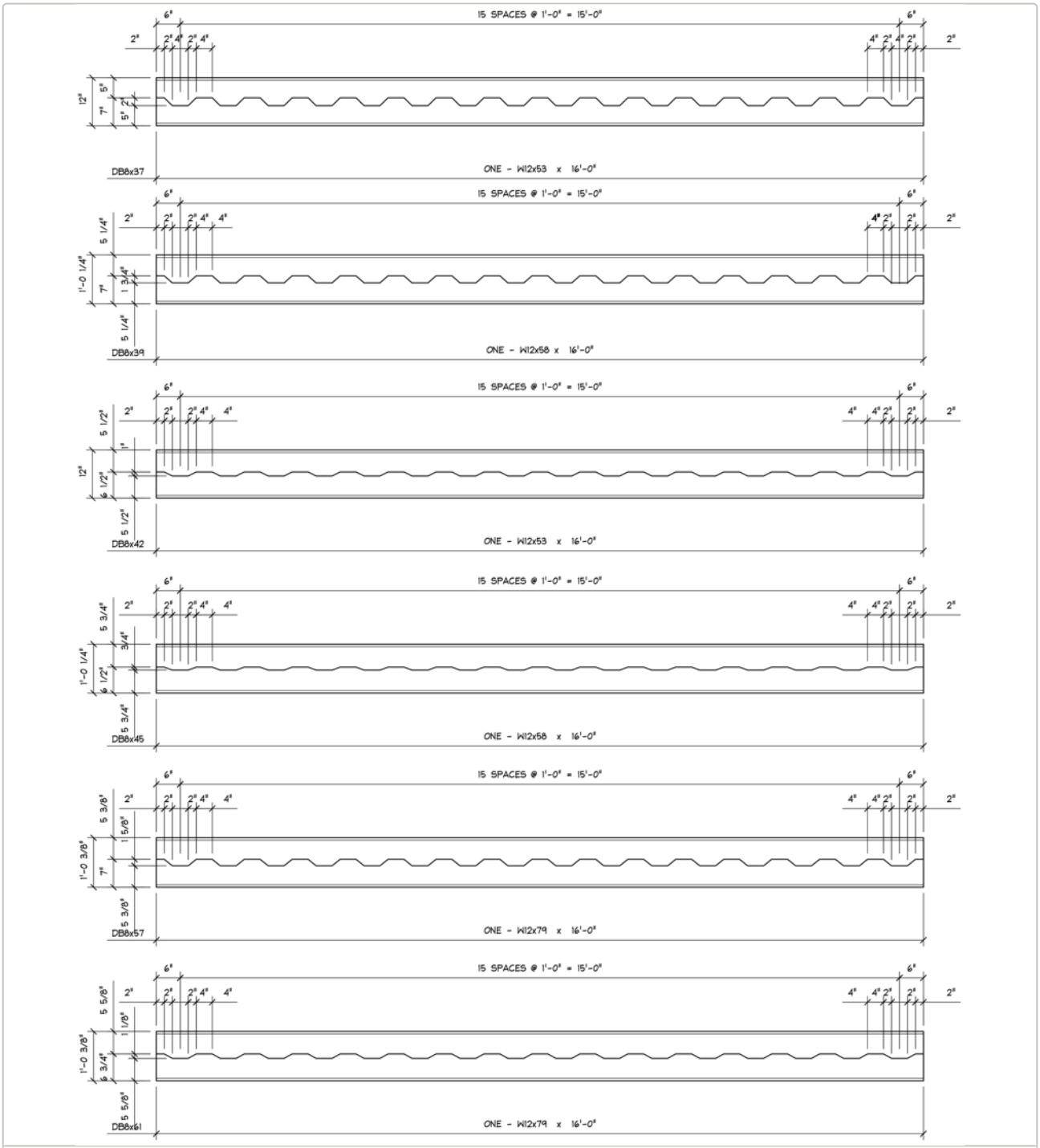

8" D-Beam® Cutting Patterns — DB 8×37, DB 8×39, DB 8×42, DB 8×44, DB 8×57, DB 8×61

TECHNICAL REFERENCE

9" D-Beam® Girder Cutting Patterns

Cutting patterns for the 9" D-Beam® sections shown. The complete catalog of twelve 9" D-Beam® sections is listed in the dimensions and properties tables. Two D-Beam® girders are produced from one parent beam without waste. Cutting patterns are provided for reference — actual fabrication drawings are prepared by the CS3-authorized steel fabricator.

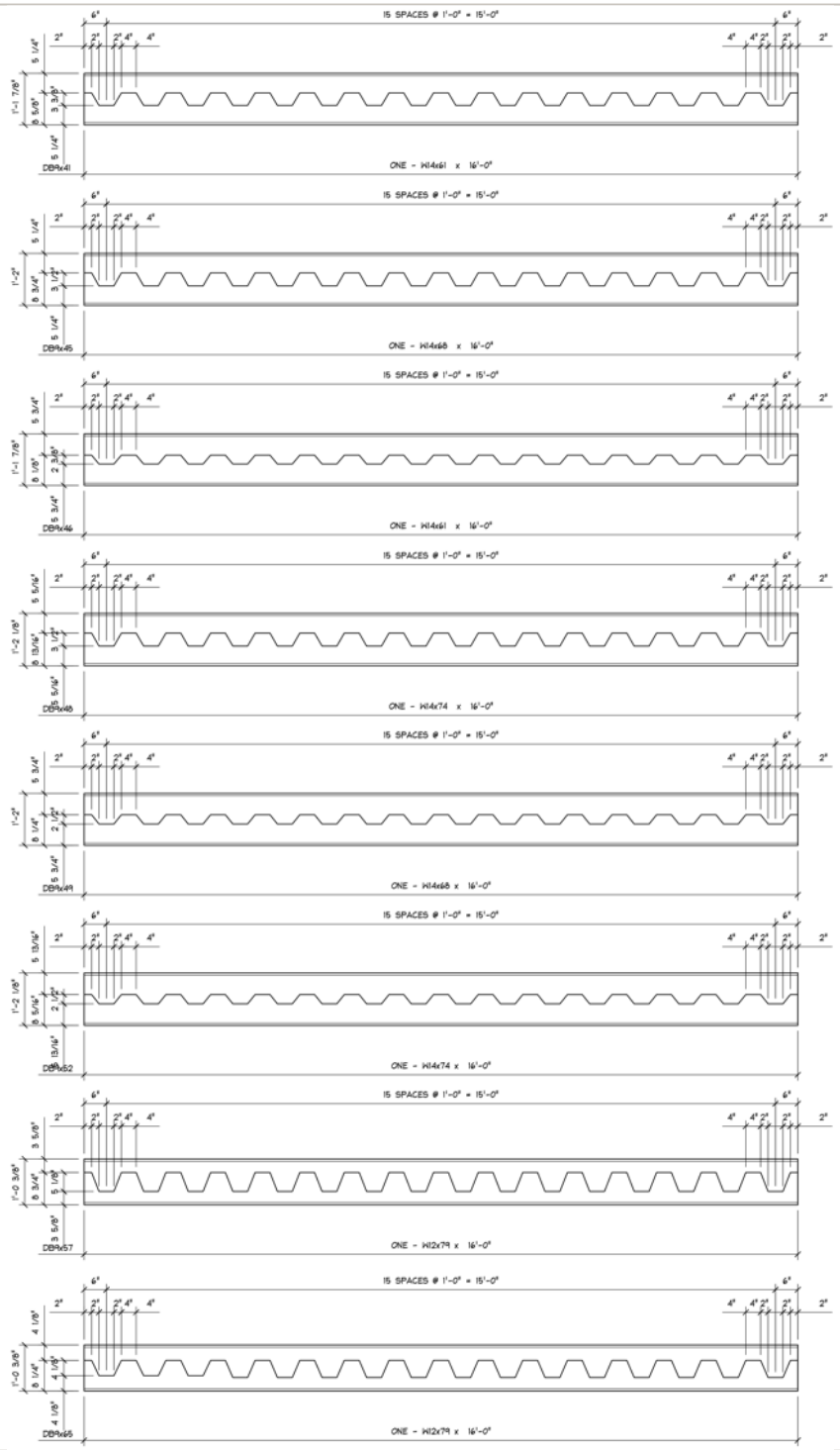

9" D-Beam® Cutting Patterns (DB 9×41 – DB 9×65) — DB 9×41, DB 9×44, DB 9×46, DB 9×47, DB 9×49, DB 9×52, DB 9×57, DB 9×65.

TECHNICAL REFERENCE

9" D-Beam® Supplemental Section Profiles

Cross-section profiles for four supplemental 9" D-Beam® sections not shown in the main cutting patterns. Full fabrication cutting templates for DB 9×55, DB 9×61, DB 9×78, and DB 9×80 are available from the CS3-authorized steel fabricator.

9" D-BEAM® SUPPLEMENTAL SECTION PROFILES · DB 9x55 · DB 9x61 · DB 9x78 · DB 9x80

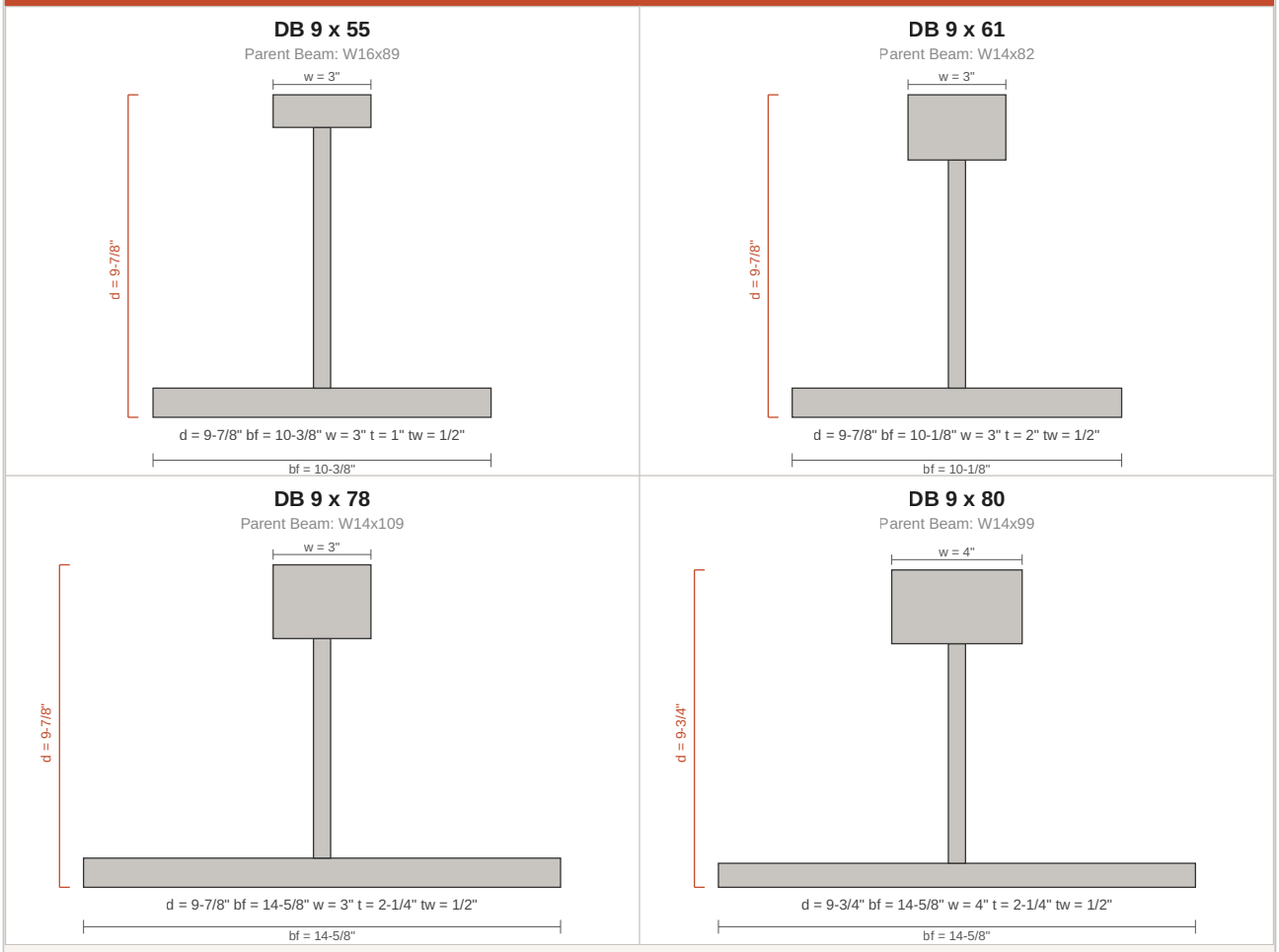

Cross-section profiles for reference only. Full fabrication cutting templates for DB 9x55, DB 9x61, DB 9x78, and DB 9x80 are available from CS3.
Non-composite steel. Properties per D-Beam® Dimensions & Properties table. Fy = 50 ksi. All dimensions in inches.

9" D-Beam® Section Profiles — DB 9×55, DB 9×61, DB 9×78, DB 9×80. Full fabrication cutting templates for these four sections are available from CS3. Cross-section profiles shown for dimensional reference.

TECHNICAL REFERENCE

Design Approach & Calculator Reference

Design Methodology

The GIRDER-SLAB® system supports both Allowable Stress Design (ASD) and Load and Resistance Factor Design (LRFD) approaches:

- **ASD — AISC 9th Edition:** Established approach for existing projects or engineer preference. M_{allow} values are tabulated in the D-Beam® Properties table above.
- **LRFD — AISC 14th Edition:** Current standard. $_{b}M_{n}$ values are tabulated in the D-Beam® Properties table above.
- **ASD — AISC 14th Edition:** M_{n} $_{b}$ values also tabulated for projects using the current code with ASD load combinations.

Composite section properties for the Girder-Slab® assembly depend on the specific assembly configuration (S1, S2, or S3 as defined in the Typical System Details). Composite properties are calculated using transformed section methods. The D-Beam® Girder Calculator automates this process for standard assemblies.

D-Beam® Girder Calculator — Online Reference Tool

The D-Beam® Girder Calculator v3.5 is available free at **girder-slab.com/for-engineers**. Registration is required. The calculator:

- Covers assemblies S1, S2, and S3 (8" D-Beam® with 8" hollow core, LRFD)
- Sizes D-Beam® sections for span, loading, and assembly configuration
- Supports ASD and LRFD design approaches
- Is intended for use by a registered professional structural engineer

For assemblies not covered by the calculator, or for projects requiring engineering consultation, contact CS3 directly. CS3 provides free engineering support to the engineer of record throughout the design process.

Building Height & Lateral Systems

The GIRDER-SLAB® system can be built as high as any other structural steel building — there is no height limit specific to the system. The D-Beam® girder and hollow core slab carry gravity loads. Lateral resistance is provided by the building's standard lateral load-resisting system: steel braced frames, moment frames, or concrete/masonry shear walls. The system integrates with any standard lateral system without modification.

Engineer of Record Responsibilities

The engineer of record (EOR) is responsible for all structural design — D-Beam® sizing, connections, lateral systems, and code conformance. CS3 tools and support do not substitute for EOR professional engineering responsibility.

TECHNICAL REFERENCE

Typical System Details

The following details represent the standard GIRDER-SLAB® system structural sections. A complete 21-detail CAD and PDF package is available for download at **girder-slab.com/for-engineers** and is suitable for direct inclusion in project construction documents. Engineer's notes appear on each detail.

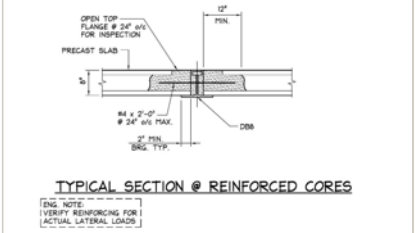

S1 Typical Section @ Reinforced Core

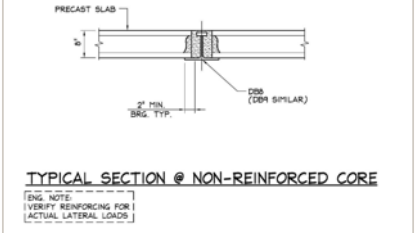

S2 Typical Section @ Non-Reinforced Core

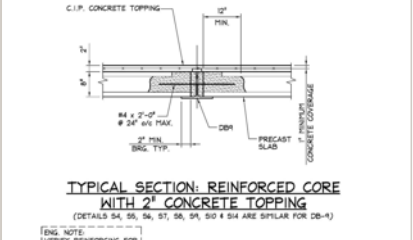

S3 Reinforced Core with 2" Concrete Topping

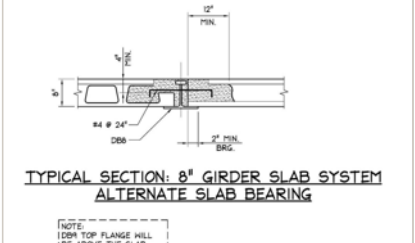

S4 8" System Alternate Slab Bearing

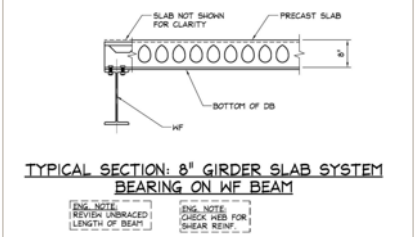

S5 8" System Bearing on WF Beam

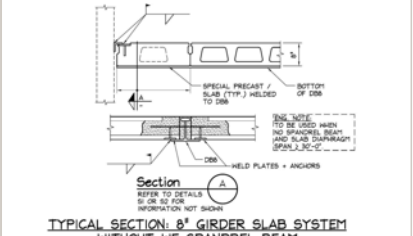

S6 8" System Without WF Spandrel Beam

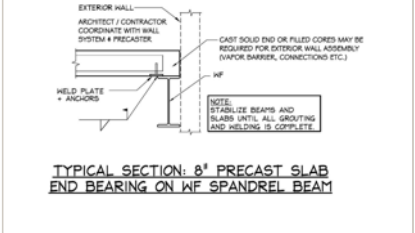

S7 Precast Slab End Bearing on WF Spandrel Beam

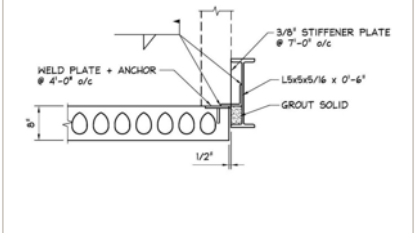

S8 Precast Slab Upset Longitudinal Spandrel Beam

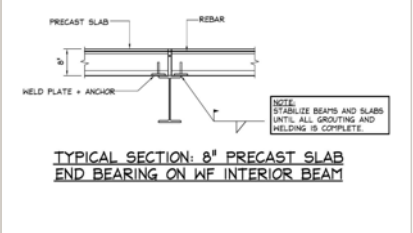

S9 Precast Slab End Bearing on WF Interior Beam

Typical System Details (continued)

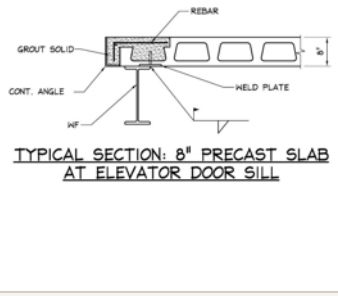

S10 Precast Slab at Elevator Door Sill

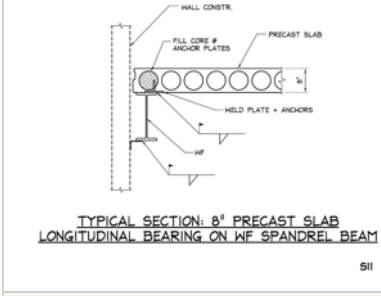

S11 Precast Slab Longitudinal Bearing on WF Spandrel Beam

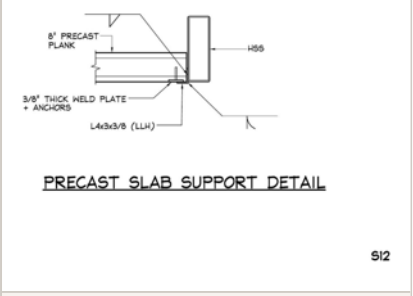

S12 Precast Slab Support Detail

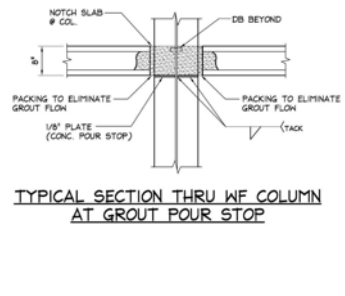

S13 Section Thru WF Column at Grout Pour Stop

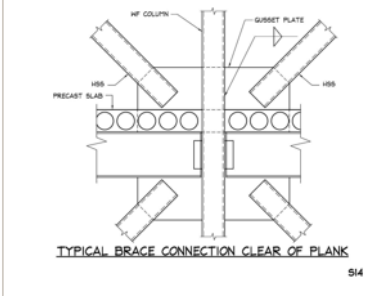

S14 Typical Brace Connection Clear of Plank

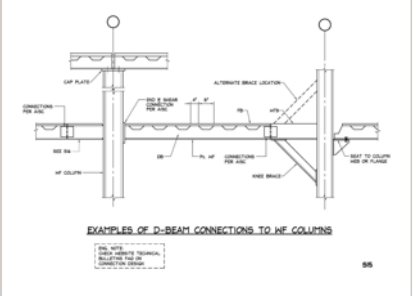

S15 D-Beam® Girder Connections to WF Columns

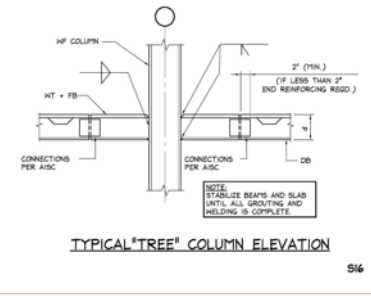

S16 Typical "Tree" Column Elevation

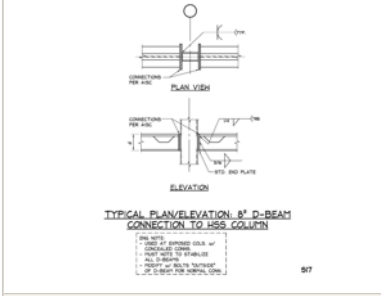

S17 8" D-Beam® Connection to HSS Column

Full CAD & PDF package

All 21 structural and architectural details are available as DWG and PDF at **girder-slab.com/for-engineers** for direct inclusion in construction documents.

TECHNICAL REFERENCE

Fire Assembly & Architectural Details

Details A1 and A2 illustrate the two standard fire protection assemblies for the D-Beam® bottom flange in accordance with UL K912. Details A3 and A4 illustrate typical drywall soffit and chase partition enclosures. All details are similar for DB9 with 2" concrete topping.

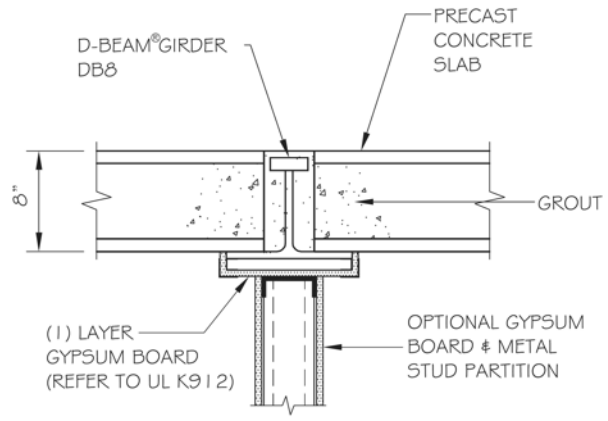

A1 Rated Drywall Soffit Enclosure

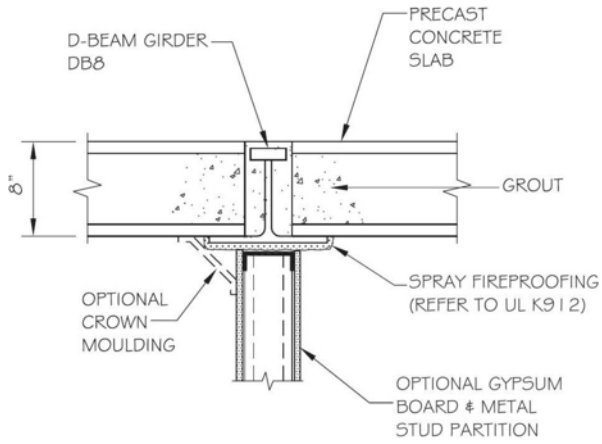

A2 Rated Spray Fireproofing (SFRM)

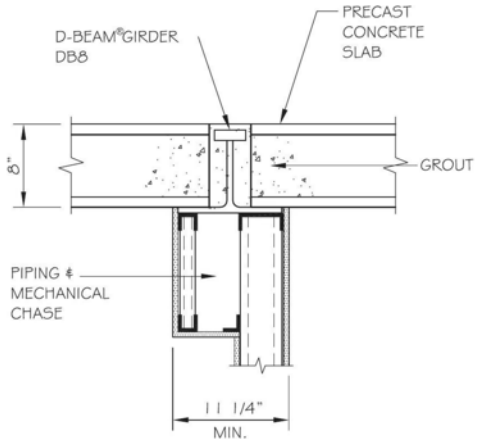

A3 Drywall Soffit / Partition Enclosure

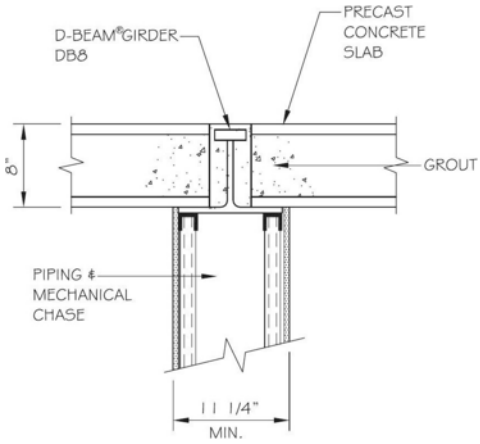

A4 Drywall Chase Partition Enclosure

The partition and rated protection details are provided for illustration purposes only and are not intended for actual use without review by the architect and engineer of record. Girder-Slab Technologies, LLC is not responsible for design, means, or methods associated with these details.

UL K912 Summary

Restrained Assembly Ratings: 2 or 3 Hr (see UL K912 Item 2)
Unrestrained Assembly Rating: 2 Hr
Unrestrained Beam Rating: 2 Hr
Certifications: BXUV (ANSI/UL 263, United States) · BXUV7 (CAN/ULC-S101, Canada)
3-Hour Restrained Rating: Requires minimum 1-1/8" concrete topping (normal weight, 3,000 psi, 150 pcf unit weight)

The complete UL K912 assembly listing — including all approved products, application thicknesses, and tolerances — is available at girder-slab.com/for-engineers. Reprinted with permission from UL. © 2026 UL LLC.

TECHNICAL REFERENCE

Girder-Slab® System Specification Guide

Application and use of the GIRDER-SLAB® system Design Guide v4.0 and technology is available for use by industry professionals. Application and use of this information requires design by a registered professional structural engineer.

Structural engineers are asked to add the following GIRDER-SLAB® system Specification Guide to the General Notes section of their construction documents. The Specification Guide and the Typical System Structural and Architectural Details are available in both CAD and PDF formats at girder-slab.com/for-engineers.

The GIRDER-SLAB® system and the D-Beam® girder are available from your customary steel fabricators authorized by CS3 / Girder-Slab Technologies, LLC. Fabrication, construction and assembly shall be in conformance with the GIRDER-SLAB® system Design Guide v4.0 specifications and details.

1. The open web Dissymmetric Beam shall be fabricated from (ASTM A992/A572 Grade 50) standard steel wide flange sections with flat bar at top-flange and shall meet AISC standards (except for depth, tolerance ± 1/8"), unpainted unless specified. The open web Dissymmetric Beam can be specified to include camber. Cambering can be built in during assembly of the girder.
2. If the structural engineer of record determines that shoring of the pre-composite assembly is needed, leave in place until grout attains required strength.
3. Precast prestressed concrete hollow-core slab units (min. 5,000 PSI) shall be in 4 or 8 foot widths and shall meet PCI standards and tolerances, 2" min. bearing unless specified otherwise.
4. Reinforcing steel (ASTM A615 Grade 60) shall be placed through the Dissymmetric Beam web openings and into slab cores.
5. Cementitious grout (min. 4,000 PSI) shall be placed monolithically around and through the Dissymmetric Beam web openings and into slab cores. When concrete topping is used, attain specified strength of grout prior to placement.
6. The GIRDER-SLAB® system shall be constructed in accordance with Underwriters Laboratories Inc., Floor-Ceiling Assembly Design No. K912 in order to meet fire classification standards and ratings set forth by BOCA and ICC codes.
7. The GIRDER-SLAB® system and D-Beam® girders shall be provided by steel fabricators authorized by CS3 / Girder-Slab Technologies, LLC in conformance with its Design-Guide and Distribution requirements. Steel Fabricator/ Distributor contact information: 1-888-478-1100 or www.girder-slab.com.
8. The supplier of the GIRDER-SLAB® system shall provide to the Project Owner (or its representative) a GIRDER-SLAB® system Compliance Certificate for each project upon completion of system assembly and construction.
9. Comply with all applicable provisions of the following standards and codes:
   - Girder-Slab Technologies, LLC Design Guide v4.0
   - American Institute of Steel Construction (AISC)
   - American Welding Society (AWS)
   - Precast Concrete Institute (PCI)
   - American Concrete Institute (ACI)
   - American Society of Testing and Materials (ASTM)
   - Underwriters Laboratories Inc. (UL) — Fire Resistance Directory UL K912
   - Building Officials & Code Administrators International Inc. (BOCA) — National Building Code
   - International Code Council Inc. (ICC) — International Building Code
   - Other applicable codes and standards

GIRDER-SLAB® and D-BEAM® are registered trademarks of Girder-Slab Technologies, LLC. © 2026 Composite Structural Steel Systems, LLC. All rights reserved.